vantageo™

Vantageo 12T1

QUICK START GUIDE

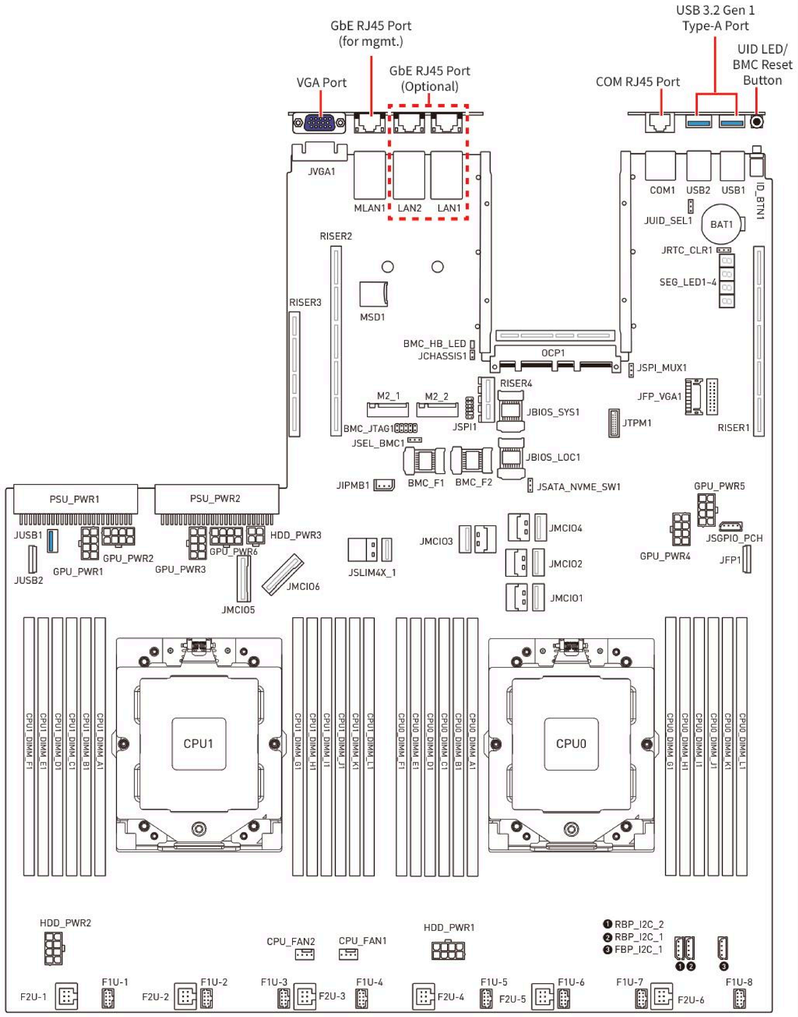

CPU

Dual AMD EPYC™ 9004 and 9005 series processors, TDP up to 360W.

Front Panel FPC Connector

JFP1

1 … 26

1	P3V3_AUX	2	P3V3_AUX	3	NA	4	FP ID LED+
5	PWR_LED-	6	FP ID LED-	7	P3V3	8	SYS_FLT_LED-
9	SYS_ERR_LED-	10	M.2 SSD_ACT_LED-	11	PWR_ON_BTN-	12	NIC1_LED+
13	GND	14	NIC1_LED-	15	SYS_RST_BTN-	16	SMB_DAT
17	SMB_CLK	18	GND	19	FP_ID_BTN-	20	NA
21	NA	22	NA	23	NIC2_LED+	24	NIC2_LED-
25	GND	26	GND				

CPU and Heatsink Installation

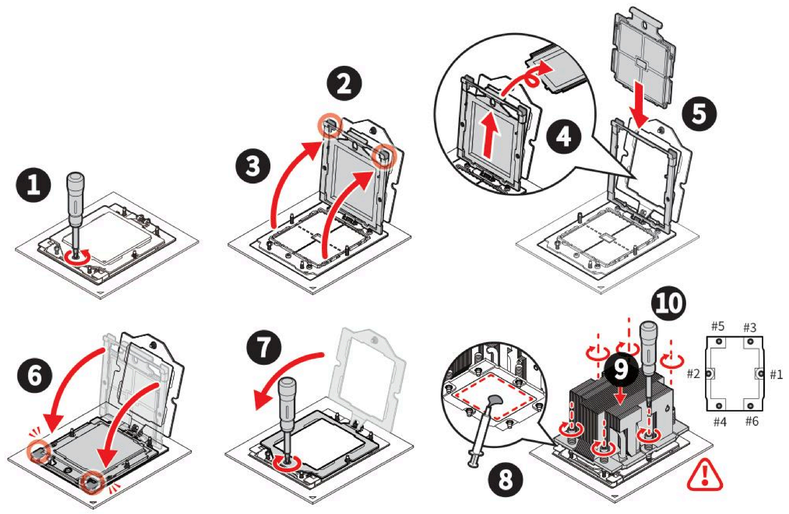

Important

*For **CPUs over 210W TDP, different CPU coolers may be required.** Refer to the "Installing CPU and Heatsink" section in the user guide for details before installation.*

Connectors, Jumpers and LED Indicators

Name	Description
PSU_PWR1~2	CRPS power connectors
GPU_PWR1~6	8-pin GPU power connectors
HDD_PWR1~2	8-pin HDD BP power connectors
HDD_PWR3	4-pin rear HDD BP power connector
JMCIO1~4	MCIO 4i connectors
JMCIO5~6	MCIO 8i connectors
JSLIM4X_1	Slimline SAS 4i connector
M2_1~2	M.2 slots (M Key, PCIe 3.0 x2, 2280)
MSD1	Micro SD card slot
RISER1	PCIe 5.0 x 32 slot (from CPU0) (CXL)
RISER2	PCIe 5.0 x 32 slot (from CPU1) (CXL)
RISER3	PCIe 5.0 x 16 slot (from CPU1) (CXL)
RISER4	Fixed slot (supports PCIe power)
OCP1	OCP 3.0 LAN mezzanine slot (supports OCP NIC 3.0 SFF, PCIe 5.0 x16 from CPU0)
CPU_FAN1~2	CPU fan connectors
F1U-1~8	1U system fan connectors
F2U-1~6	2U system fan connectors
JUSB1	USB 3.2 Gen 1 Type-A port
JUSB2	USB 3.2 Gen 1 FPC connector
USB1~2	USB 3.2 Gen 1 Type-A ports (on rear side)
JFP1	Front panel FPC connector
JFP_VGA1	Front VGA header
JTPM1	SPI TPM header
FBP_I2C_1	I2C headers
RBP_I2C_1~2	
JSGPIO_PCH	Rear BP SGPIO header
JIPMB1	IPMB header
JCHASSIS1	Chassis intrusion header

Name	Description
COM1	COM RJ45 port (on rear side)
MLAN1	GbE RJ45 port (for mgmt., on rear side)
LAN1~2	GbE RJ45 ports (on rear side, optional)
JVGA1	VGA port (on rear side)
JSPI_MUX1	BIOS select jumper (default pin 1-2, SYS BIOS ROM & control by BMC)
JSEL_BMC1	BMC select jumper (default pin 1-2, BMC1)
JRTC_CLR1	CMOS clear jumper (default pin 1-2, normal)
JUID_SEL1	UID/ BMC select jumper (default pin 1-2, UID button)
JSATA_NVME_SW1	JMCIO1~4 SATA/ NVMe signal select jumper (default pin 2-3, NVMe)
SEG_LED1~4	Port 80 debug LEDs
BMC_HB_LED	BMC heartbeat LED

Memory

The server board supports DDR5 RDIMMs and 3DS RDIMMs with memory speeds up to 6400 MT/s (1DPC).

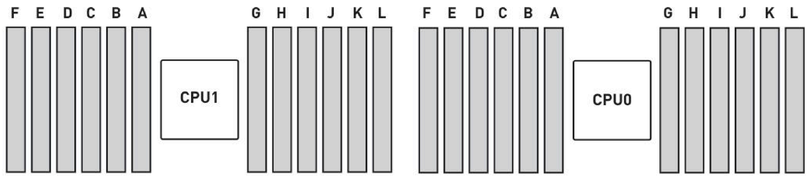

1 CPU

Qty. of DDR5 \ Channel	F	E	D	C	B	A		G	H	I	J	K	L
12	V	V	V	V	V	V	CPU	V	V	V	V	V	V
10		V	V	V	V	V		V	V	V	V	V	
8		V		V	V	V		V	V	V		V	
6				V	V	V		V	V	V			
4				V		V		V		V			
2						V		V					
1						V							

2 CPUs

Qty. of DDR5	Channel	F	E	D	C	B	A		G	H	I	J	K	L
24	CPU1	V	V	V	V	V	V	CPU	V	V	V	V	V	V
	CPU0	V	V	V	V	V	V		V	V	V	V	V	V
20	CPU1		V	V	V	V	V		V	V	V	V	V	
	CPU0		V	V	V	V	V		V	V	V	V	V	
16	CPU1		V		V	V	V		V	V	V		V	
	CPU0		V		V	V	V		V	V	V		V	
12	CPU1				V	V	V		V	V	V			
	CPU0				V	V	V		V	V	V			
8	CPU1				V		V		V		V			
	CPU0				V		V		V		V			
4	CPU1						V		V					
	CPU0						V		V					
2	CPU1						V							
	CPU0						V							
1	CPU1													
	CPU0						V							

"**V**" indicates DIMMs are populated with **DDR5**.

Important

There should be at least one DDR5 DIMM populated.